Module 3
Link Aggregation

ITNET03

Advanced Routing and Switching

Module Objectives

Module Title: Link Aggregation

Module Objectives:

- Describe the purpose of link aggregation and their operation in a network.
- Configure link aggregation management protocols: PAgP and LACP
- Identify and troubleshoot common link aggregation issues

Module References:

- CCNAv7 SRWE – Module 6

© 2016 Cisco and/or its affiliates. All rights reserved. Cisco Confidential

3.1 Link Aggregation Operation

© 2016 Cisco and/or its affiliates. All rights reserved. Cisco Confidential

The Need for Link Aggregation

- In a network, there are scenarios in which more bandwidth between devices is needed than what can be provided by a single link.

Solution 1: Upgrade port capacity

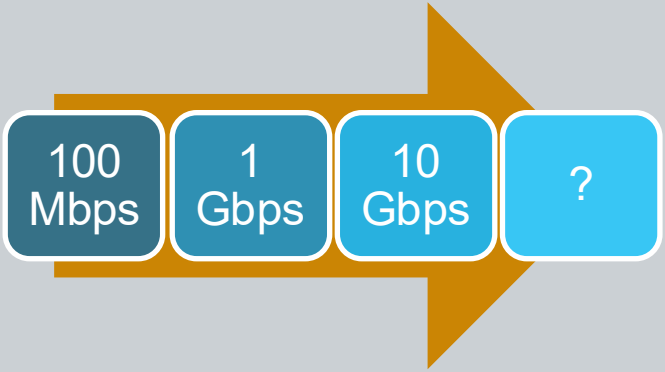

- High bandwidth ports require additional cost
- Limited by the highest available port bandwidth – it's not unlimited

Solution 2: Use multiple links

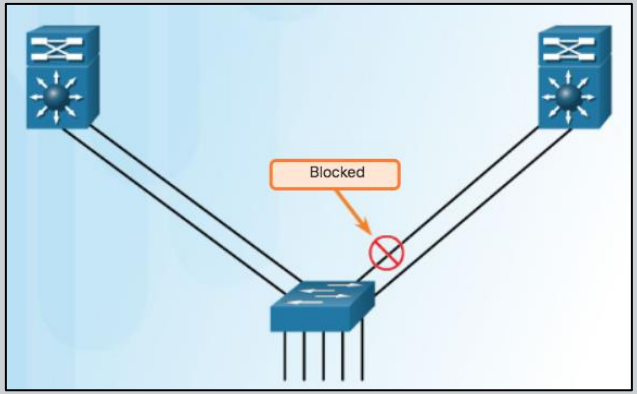

- Redundant links are normally blocked by STP
- Need to ensure configuration consistency between links

© 2016 Cisco and/or its affiliates. All rights reserved. Cisco Confidential

Link Aggregation

- Link aggregation allows the creation of logical links made up of several physical links switches to increase the overall speed of switch-to-switch communication.
- Link aggregation technology is needed to allow redundant links between devices that will not be blocked by STP.
- *EtherChannel* is Cisco's link aggregation technology that groups multiple physical Ethernet links together into one single logical channel to provide increased bandwidth and redundancy between switches, routers, and servers.
- When an EtherChannel is configured, the resulting virtual interface from aggregated links is called a *port channel*

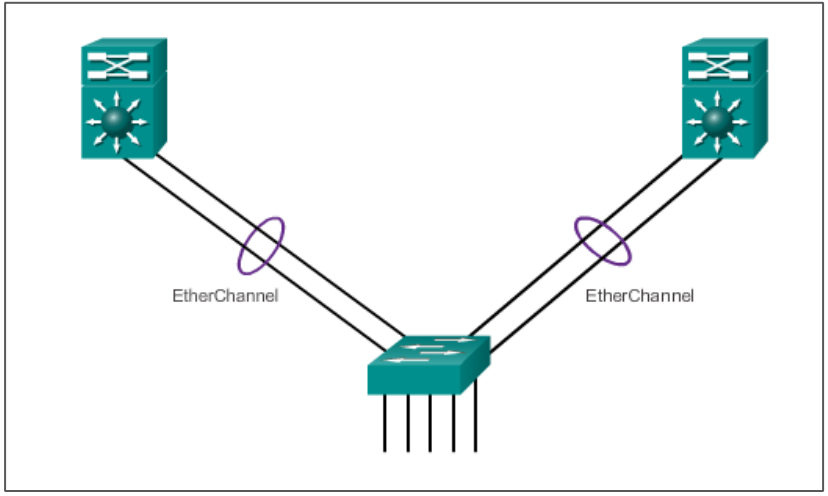

© 2016 Cisco and/or its affiliates. All rights reserved. Cisco Confidential

Advantages of EtherChannel

- Relies on existing switch ports → No need to upgrade hardware to a faster and more expensive connection.
- Most configuration tasks can be done on the port channel interface instead of on each individual port → configuration consistency throughout bundled links.
- Capable of load balancing between links of the same port channel.
- Port channel is seen as one logical link → Not blocked by STP hence all physical links are utilized
- Overall link is seen as one logical connection hence the loss of one physical link within the channel does not create a change in the topology → natural redundancy

© 2016 Cisco and/or its affiliates. All rights reserved. Cisco Confidential

Implementation Restrictions

- EtherChannel groups up to 8 physical ports into one or more logical EtherChannel links created between two switches or between a server and a switch.
- Currently, a Cisco 2960 switch can support up to 6 Etherchannels
- EtherChannel Restrictions
  - Interfaces in a channel must be of the same type – i.e. all FastEthernet / all GigabitEthernet
  - All links in the same channel must connect the same pair of switches

© 2016 Cisco and/or its affiliates. All rights reserved. Cisco Confidential

Implementation Restrictions

- All bundled interfaces in an Etherchannel must use the same setting for the following parameters:
  - Speed - 10 / 100 / 1000 / auto
  - Duplex mode – half/ full / auto
  - DTP Mode – access / trunk / desirable / auto
  - VLAN assignment (access ports)
  - Allowed VLANs (trunk ports)
  - Native VLAN (trunk ports

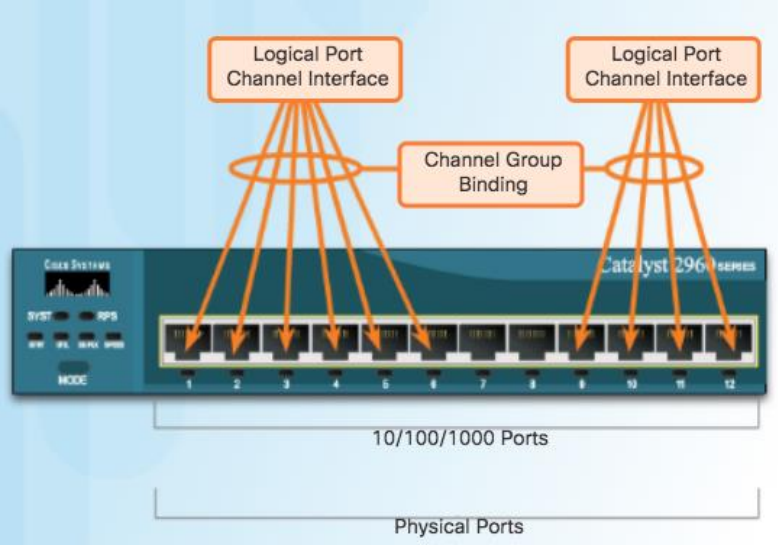

- Each EtherChannel has a logical port channel interface and changes to a channel affects its physical interfaces.

© 2016 Cisco and/or its affiliates. All rights reserved. Cisco Confidential

EtherChannel Management Protocols

- Etherchannel management protocols are designed to ensure that that all ports in an EtherChannel have the same configuration
- Detects the configuration on both ends of a link and makes sure they are compatible before channeling
- Form a channel through dynamic negotiation with adjoining switches.
- 2 known protocols
  - Port Aggregation Protocol (PAgP)
  - Link Aggregation Control Protocol (LACP)
- **Note**: It is also possible to configure a static or unconditional EtherChannel without PAgP or LACP but it is the administrator's task to ensure configuration compatibility

© 2016 Cisco and/or its affiliates. All rights reserved. Cisco Confidential

Port Aggregation Protocol (PAgP)

- Cisco proprietary protocol that aids in the automatic creation of EtherChannel links.
- Operates by sending PAgP packets every 30 seconds across the link to negotiate and form the channel
- Identifies matched Ethernet links configured into a port channel and groups them into an aggregated link.
- Ensures that when an EtherChannel is created, all ports have the same type of configuration.
- Switch interface PAgP modes
  - **Auto** – Port responds to PAgP packets, but does not actively initiate negotiation (default)
  - **Desirable** – Port responds to PAgP packets and actively initiates negotiation
  - **On** – Port is forced into the channel without PAgP, does not respond to PAgP packets / negotiation

© 2016 Cisco and/or its affiliates. All rights reserved. Cisco Confidential

PAgP Mode Settings Example

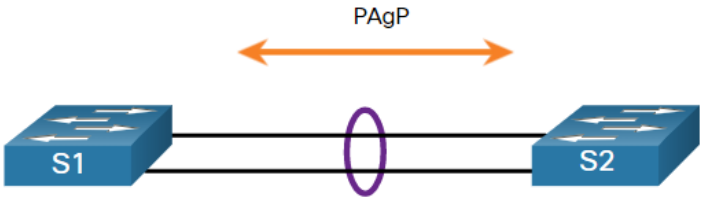

The table shows the various combination of PAgP modes on S1 and S2 and the resulting channel establishment outcome.

S1	S2	Channel Establishment
On	On	Yes
On	Desirable/Auto	No
Desirable	Desirable	Yes
Desirable	Auto	Yes
Auto	Desirable	Yes
Auto	Auto	No

© 2016 Cisco and/or its affiliates. All rights reserved. Cisco Confidential

Link Aggregation Control Protocol (LACP)

- IEEE specification (802.3ad) that allows several physical ports to be bundled to form a single logical channel.
- Performs similar functions with PAgP - allows a switch to negotiate an automatic bundle and ensures compatible configuration
- Can be used to create EtherChannels in multivendor environments
- Switch interface PAgP modes
  - **Passive –** Port respond to LACP packets, but does not actively negotiate to form the channel
  - **Active –** Port responds to LACP packet and actively negotiates to form the channel
  - **On** – Port is forced into the channel without LACP, does not respond to LACP packets / negotiation

© 2016 Cisco and/or its affiliates. All rights reserved. Cisco Confidential

LACP Mode Settings Example

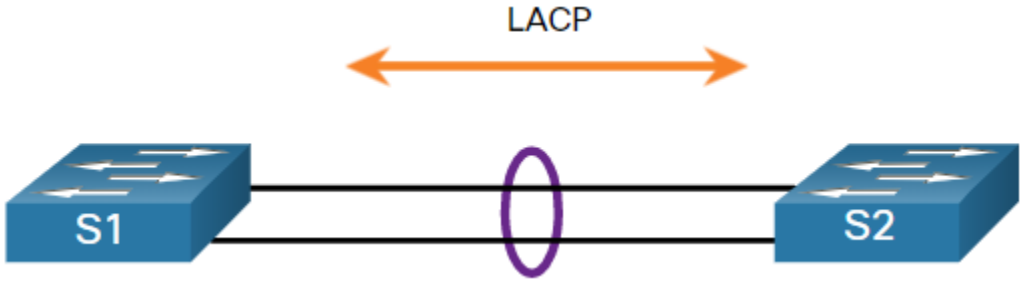

The table shows the various combination of LACP modes on S1 and S2 and the resulting channel establishment outcome.

S1	S2	Channel Establishment
On	On	Yes
On	Active/Passive	No
Active	Active	Yes
Active	Passive	Yes
Passive	Active	Yes
Passive	Passive	No

© 2016 Cisco and/or its affiliates. All rights reserved. Cisco Confidential

3.2 Configure EtherChannel

© 2016 Cisco and/or its affiliates. All rights reserved. Cisco Confidential

Configuration Guidelines

The following guidelines and restrictions are useful for configuring EtherChannel:

- **EtherChannel support** - All Ethernet interfaces must support EtherChannel with no requirement that interfaces be physically contiguous.
- **Speed and duplex** - Configure all interfaces in an EtherChannel to operate at the same speed and in the same duplex mode.
- **VLAN match** - All interfaces in the EtherChannel bundle must be assigned to the same VLAN or be configured as a trunk (shown in the figure).
- **Range of VLANs** - An EtherChannel supports the same allowed range of VLANs on all the interfaces in a trunking EtherChannel; otherwise, channeling fails even if ports are set to **LACP active** or **PAgP desirable** mode.

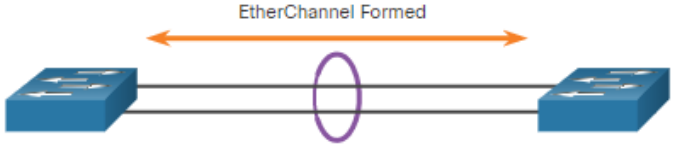

S1 Port Configurations	
Speed	1 Gbps
Duplex	Full
VLAN	10

S2 Port Configurations	
Speed	1 Gbps
Duplex	Full
VLAN	10

its affiliates. All rights reserved. Cisco Confidential

Configuration Guidelines (Cont.)

- If port settings must be changed, configure them in port channel interface configuration mode.
  - Any configuration applied to the port channel interface also affects individual interfaces bundled into it.
  - Configurations applied to the individual interfaces do not affect the port channel interface. Therefore, making configuration changes to a bundled interface may cause interface compatibility issues.

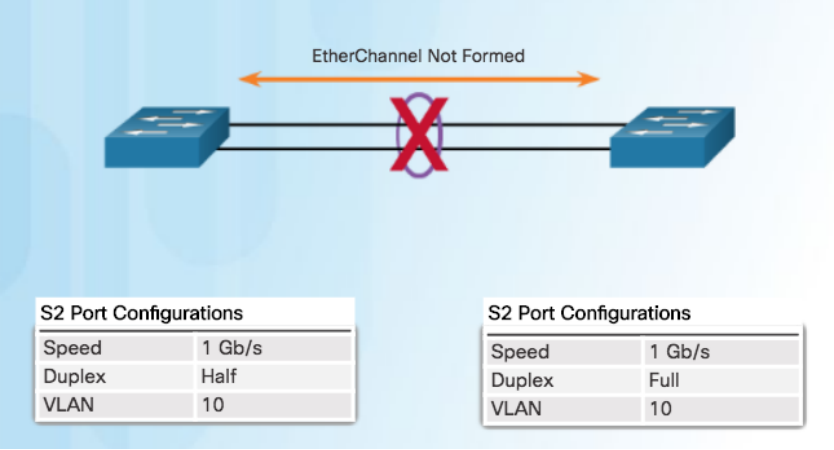

- The port channel can be configured in access mode, trunk mode (most common), or as a routed port.

© 2016 Cisco and/or its affiliates. All rights reserved. Cisco Confidential

Configuration Procedure

- Step 1: Select ports to be included in channel. Use the *range* command for convenience

```
Switch(config)# interface range interface_type interface_range
```

- Step 2: Specify channeling protocol if using one

```
Switch(config-if-range)# channel-protocol {pagp | lacp}
```

- Step 3: Create the port channel by specifying the port mode

```
Switch(config-if-range)# channel-group number mode {active | on |
auto | desirable | passive}
```

- Step 4: Configure the channel link characteristics through the channel interface

```
Switch(config)# interface port-channel number
Switch(config-if)# interface settings
```

© 2016 Cisco and/or its affiliates. All rights reserved. Cisco Confidential

Sample Configuration

- **Step 1:** Select ports to be included in channel
- **Step 2:** Specify channeling protocol
- **Step 3:** Create the port channel
- **Step 4:** Configure the channel link characteristics through the channel interface

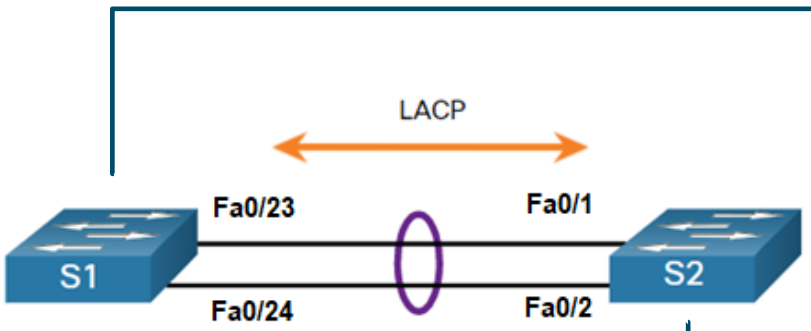


```
S1(config)# interface range Fa0/23-24
S1(config-if-range)# channel-protocol lacp
S1(config-if-range)# channel-group 2 mode active
S1(config)# interface port-channel 2
S1(config-if)# switchport mode trunk
S1(config-if)# switchport trunk native VLAN 99
```

```
S2(config)# interface range Fa0/1-2
S2(config-if-range)# channel-protocol lacp
S2(config-if-range)# channel-group 2 mode passive
S2(config)# interface port-channel 2
S2(config-if)# switchport mode trunk
S2(config-if)# switchport trunk native VLAN 99
```

Load Balancing

- Load balancing of traffic across member ports of a channel is a key configuration to optimize the utilization of an Etherchanel
- Several options available:
  - **src-mac:** Source MAC addresses (default on Catalyst 2960 switch)
  - **dst-mac:** Destination MAC addresses
  - **src-dst-mac:** Source and destination MAC addresses
  - **src-ip:** Source IP addresses
  - **dst-ip:** Destination IP addresses
  - **src-dst-ip:** Source and destination IP addresses (default)
  - **src-port:** Source TCP/User Datagram Protocol (UDP) port
  - **dst-port:** Destination TCP/UDP port
  - **src-dst-port:** Source and destination TCP/UDP port

© 2016 Cisco and/or its affiliates. All rights reserved. Cisco Confidential

Load Balancing

- To configure: **`Switch(config)# port-channel load-balance`** ***`option`***
- Selected load balancing technique is applied to all channels on the switch
- Select the option that provides the most variety in configuration

- Example: In this topology, most traffic is expected to go from PCs to server and back.

Will likely send traffic from a single source to multiple destinations

```
SW1(config)#port-channel load-balance dst-mac
```

Will likely send traffic from multiple sources to a single destination

```
SW2(config)#port-channel load-balance src-mac
```

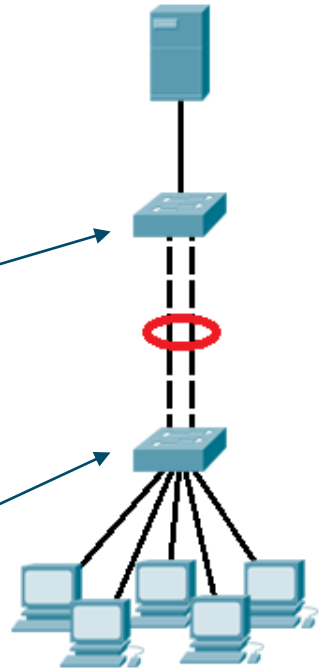

© 2016 Cisco and/or its affiliates. All rights reserved. Cisco Confidential

Verify EtherChannel

- **show etherchannel port-channel** - displays information about a specific port channel interface.

```
S1#show etherchannel port-channel
                Channel-group listing:
                ----------------------

Group: 1
----------
                Port-channels in the group:
                ---------------------------

Port-channel: Po1    (Primary Aggregator)
------------

Age of the Port-channel   = 00d:00h:25m:45s
Logical slot/port   = 2/1       Number of ports = 2
GC                  = 0x00000000      HotStandBy port = null
Port state          = Port-channel
Protocol            =   LACP
Port Security       = Disabled

Ports in the Port-channel:

Index   Load   Port     EC state        No of bits
------+------+------+------------------+-----------
  0     00     Fa0/24   Active             0
  0     00     Fa0/23   Active             0
Time since last port bundled:    00d:00h:04m:51s    Fa0/23
```

© 2016 Cisco and/or its affiliates. All rights reserved. Cisco Confidential

Verify EtherChannel

- **show etherchannel summary** - displays one line of information per port channel.

```
S1#show etherchannel summary
Flags:  D - down        P - in port-channel
        I - stand-alone s - suspended
        H - Hot-standby (LACP only)
        R - Layer3      S - Layer2
        U - in use      f - failed to allocate aggregator
        u - unsuitable for bundling
        w - waiting to be aggregated
        d - default port


Number of channel-groups in use: 1
Number of aggregators:           1

Group  Port-channel  Protocol    Ports
------+-------------+-----------+-----------------------------------------------


1      Po1(SU)           LACP   Fa0/23(P) Fa0/24(P)
```

© 2016 Cisco and/or its affiliates. All rights reserved. Cisco Confidential

Verify EtherChannel

- **show interfaces etherchannel** - provides information about the role of a physical member interface of the EtherChannel.

```
S1#show interfaces etherchannel
FastEthernet0/23:
Port state     = 1
Channel group = 1            Mode = Active          Gcchange = -
Port-channel   = Po1         GC    =   -            Pseudo port-channel = Po1
Port index     = 0           Load = 0x00            Protocol =   LACP

Flags:  S - Device is sending Slow LACPDUs   F - Device is sending fast LACPDUs

        A - Device is in active mode.        P - Device is in passive mode.

Local information:
                              LACP port     Admin     Oper    Port        Port
Port      Flags   State       Priority      Key       Key     Number      State
Fa0/23    SA      down        32768         0x0       0x0     0x23

Partner's information:
                  LACP port                          Admin   Oper    Port    Port
Port      Flags   Priority  Dev ID          Age      key     Key     Number  State
Fa0/23    SA      32768     000D.BD77.7613           0x0     0x0     0x2

Age of the port in the current state:  00d:00h:11m:30s
```

Verify EtherChannel

- **show etherchannel load-balance** – shows the current load balancing scheme used by the switch for its etherchannels.

```
S1#show etherchannel load-balance
EtherChannel Load-Balancing Operational State (src-mac):
Non-IP: Source MAC address
  IPv4: Source MAC address
  IPv6: Source MAC address
```

© 2016 Cisco and/or its affiliates. All rights reserved. Cisco Confidential

3.3 Troubleshoot EtherChannel

© 2016 Cisco and/or its affiliates. All rights reserved. Cisco Confidential

Common Issues with EtherChannel Configurations

- Common EtherChannel issues include the following:
  - The dynamic negotiation options for PAgP and LACP are not compatibly configured on both ends of the EtherChannel.
  - Linked ports between switches are not members of the same bundle
  - Ports in a bundle are not configured with uniform settings
    - Access mode ports not assigned to the same VLAN
    - Trunk mode ports not using the same native VLAN
    - Trunk mode ports with different allowed VLAN range
  - Usually, a quick check using the '*show etherchannel summary*' command can provide indications of the type of issue that is causing the error

© 2016 Cisco and/or its affiliates. All rights reserved. Cisco Confidential

Troubleshoot EtherChannel Example

Case 1: Incompatible port modes

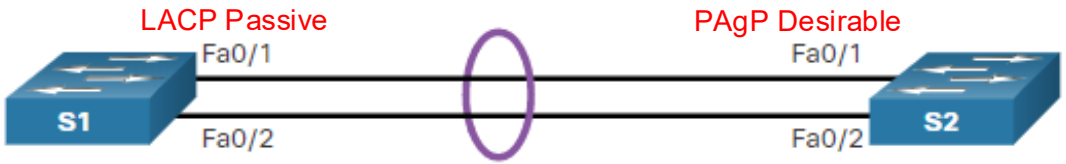


```
S1#show etherchannel summary
Flags:  D - down        P - in port-channel
        I - stand-alone s - suspended
        H - Hot-standby (LACP only)
        R - Layer3      S - Layer2
        U - in use      f - failed to allocate ag
        u - unsuitable for bundling
        w - waiting to be aggregated
        d - default port


Number of channel-groups in use: 1
Number of aggregators:           1

Group  Port-channel  Protocol    Ports
------+-------------+-----------+---------------
1      Po1(SD)           LACP   Fa0/1(I) Fa0/2(I)
```

```
S2#show etherchannel summary
Flags:  D - down        P - in port-channel
        I - stand-alone s - suspended
        H - Hot-standby (LACP only)
        R - Layer3      S - Layer2
        U - in use      f - failed to allocate ag
        u - unsuitable for bundling
        w - waiting to be aggregated
        d - default port


Number of channel-groups in use: 1
Number of aggregators:           1

Group  Port-channel  Protocol    Ports
------+-------------+-----------+---------------
1      Po1(SD)           PAgP   Fa0/1(I) Fa0/2(I)
```

Troubleshoot EtherChannel Example

Case 2: Incorrect bundling

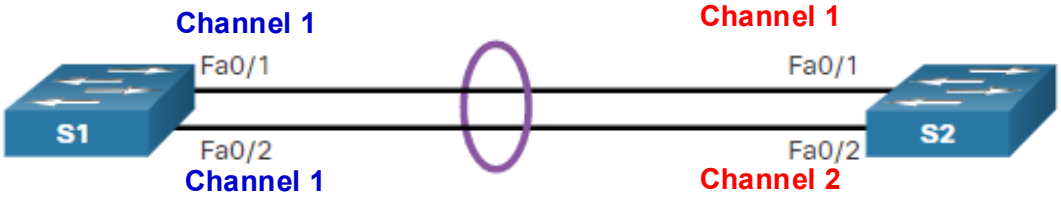


```
S1#show etherchannel summary
Flags:  D - down        P - in port-channel
        I - stand-alone s - suspended
        H - Hot-standby (LACP only)
        R - Layer3      S - Layer2
        U - in use      f - failed to allocate
        u - unsuitable for bundling
        w - waiting to be aggregated
        d - default port


Number of channel-groups in use: 1
Number of aggregators:           1

Group  Port-channel  Protocol    Ports
------+-------------+-----------+-----------------
1  Po1(SU)           LACP    Fa0/1(I)  Fa0/2(P)
```

```
S2#show etherchannel summary
Flags:  D - down        P - in port-channel
        I - stand-alone s - suspended
        H - Hot-standby (LACP only)
        R - Layer3      S - Layer2
        U - in use      f - failed to allocate
        u - unsuitable for bundling
        w - waiting to be aggregated
        d - default port


Number of channel-groups in use: 1
Number of aggregators:           1

Group  Port-channel  Protocol    Ports
------+-------------+-----------+-----------------
1      Po1(SD)           LACP    Fa0/1(I)
2      Po2(SD)           LACP    Fa0/2(I)
```

Troubleshoot EtherChannel Example

Case 3: Inconsistent configuration

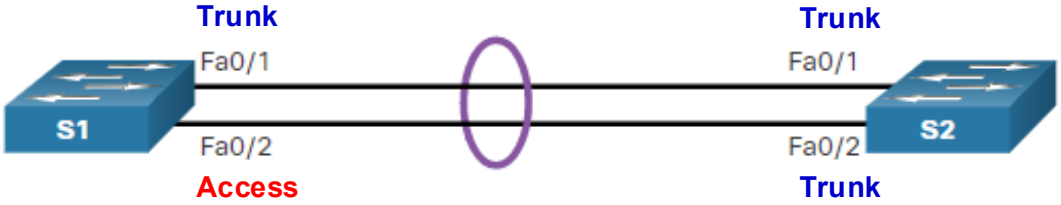


```
S1#show etherchannel summary
Flags:  D - down        P - in port-channel
        I - stand-alone s - suspended
        H - Hot-standby (LACP only)
        R - Layer3      S - Layer2
        U - in use      f - failed to allocate
        u - unsuitable for bundling
        w - waiting to be aggregated
        d - default port


Number of channel-groups in use: 1
Number of aggregators:           1

Group  Port-channel  Protocol    Ports
------+-------------+-----------+-----------------
1  Po1(SU)           LACP   Fa0/1(P) Fa0/2(s)
```

```
S1#show etherchannel summary
Flags:  D - down        P - in port-channel
        I - stand-alone s - suspended
        H - Hot-standby (LACP only)
        R - Layer3      S - Layer2
        U - in use      f - failed to allocate
        u - unsuitable for bundling
        w - waiting to be aggregated
        d - default port


Number of channel-groups in use: 1
Number of aggregators:           1

Group  Port-channel  Protocol    Ports
------+-------------+-----------+-----------------
1  Po1(SU)           LACP   Fa0/1(P) Fa0/2(P)
```

© 2016 Cisco and/or its affiliates. All rights reserved. Cisco Confidential

Questions?

What did you learn in this module?

- To increase bandwidth or redundancy, multiple physical links could be connected between devices.
- EtherChannel is a link aggregation technology that allows redundant links between devices that will not be blocked by STP.
- Etherchannel management protocols allow switches to automatically negotiate channeling while at the same time ensuring that only ports with compatible settings are grouped into the channel
  - **Port Aggregation Protocol (PAgP)** is Cisco proprietary and uses the desirable and auto port modes
  - **Link Aggregation Control Protocol (LACP)** is an open standard and uses the active and passive port modes
- To successfully bundle ports in the same channel Etherchannel, ensure that the following settings are uniform among them: port type, speed, duplex, DTP mode, and VLAN membership settings

© 2016 Cisco and/or its affiliates. All rights reserved. Cisco Confidential

What did you learn in this module?

- To successfully create a working channel between two switches ensure that aggregation management protocols and port modes are compatible
- Etherchannel performs load balancing among the physical connections making up a channel. The load balancing scheme should be set to provide the most variety in configuration to efficiently utilize the links.

© 2016 Cisco and/or its affiliates. All rights reserved. Cisco Confidential

CISCO